ELECTRICAL WINCH
5250EN

Assembly & Operating Instructions

CONTENTS

INTRODUCTION 1
GETTING TO KNOW YOUR WINCH 2
SAFETY PRECAUTIONS 3
GENERAL TIPS FOR SAFE OPERATION 5
WINCHING TECHNIQUES A-Z 6
WINCH ASSEMBLY AND MOUNTING 7
MOUNTING DRAWING 9
WINCH ACCESSORIES YOU WILL NEED 9
RIGGING TECHNIQUES 9
WINCH WORKING DEMONSTRATION 10
REPLACING THE WIRE ROPE 11
MAINTENANCE 11
TROUBLE SHOOTING 12
WINCH ASSEMBLY DRAWING 13
WINCH PARTS LIST 14
SPECIFICATION 15

INTRODUCTION

Congratulations on your purchase of a high quality winch. We design and build winches to strict specifications and with proper use and maintenance will bring you years of satisfying service.

⚠WARNING - Read, study and follow all instructions before operating this winch. Failure to heed these instructions may result in personal injury and/or property damage.

Your winch can develop tremendous pulling forces and if used unsafely or improperly could result in property damage, serious injury or death. Throughout this manual you will find the following symbols for caution, warning and danger. Pay particular attention to the notes preceded by these symbols as they are written for your safety. Ultimately, safe operation of this device rests with you, the operator.

⚠ **CAUTION**	**This indicates a potentially hazardous situation, which if not avoided, may result in minor or moderate injury. This notation is also used to alert you against unsafe practices.**
⚠ **WARNING**	**This indicates a potentially hazardous situation, which if not avoided,could result in death or serious injury.**

GETTING TO KNOW YOUR WINCH

Your winch is a powerful piece of machinery. It is important that you understand the basics of its operation and specifications so that when you need to use it, you can use it with confidence and safety. Below is a list of the components of your winch and their use. You should practice using your winch before you are in a situation where you need to use it.

1. This winch is engineered for maximum line pull with only one layer of cable spooled onto the winch drum (the first layer).
2. Motor: Your 7.1hp/7.9hp motor is powered by a 12/24 volt battery and provides power to the gear mechanism which turns the drum and winds the wire rope;
3. Winch Drum: The winch drum is the cylinder on which the wire rope is stored. It can feed or wind the rope depending on the remote winch switch.
4. Wire Rope (cable): Your winch has a ' galvanized aircraft cable designed specifically for load capacity of 5250KGs. The wire rope feeds onto the drum in the “under wind” position through the roller fairlead and is looped at the end to accept the clevis hook pin.
5. Roller Fairlead: When using the winch at an angle the roller fairlead acts to guide the wire rope onto the drum and minimizes damage to the wire rope from abrasion on the winch mount or bumper.
6. Mechanic Gear System: The reduction gears convert the winch motor power into extreme pulling forces.
7. Braking System: Braking action is automatically applied to the winch drum when the winch motor is stopped and there is a load on the wire rope. A separate mechanical brake applies the braking action.
8. Free Spooling Clutch: The clutch allows the operator to manually disengage (“CLUTCH OUT”) the spooling drum from the gear train, free spool. Engaging the clutch (“CLUTCH IN”) locks the winch into the gear system.
9. Solenoid: Power from the vehicle battery flows through the weather-sealed switch before being directed to the winch motor.
10. Remote Switch: The Power switch leads have a dual switch for powering in or powering out your winch drum. The Power switch leads allow you to stand clear of the wire rope when the winch is under load.

SAFETY PRECAUTIONS

⚠WARNING⚠

⚠ **WARNING –** Do not exceed rated capacity shown in this table.

Layer	Rated line pull lbs (kgs)	Total rope on the drum ft (m)
1	11574（5250）	21.3（6.5）
2	9352（4242）	45.9（14.0）
3	7848（3560）	65.9（21.0）

⚠ **WARNING –** Intermittent use only. Allow winch to cool between uses.

⚠ **WARNING -** Do not use winch to lift (vertically).

⚠ **WARNING -** Do not use winch to pull or move people in any way.

⚠ **WARNING –** NEVER cut, weld, or modify any part of the winch or cable.

⚠ **WARNING -** A minimum of five wraps of cable around the drum barrel is necessary for pulling and holding the rated load.

⚠ **WARNING -** Keep yourself and others a safe distance to the side of the cable when it is under tension.

⚠ **WARNING –** The wire rope may break before the motor stalls. For heavy loads at or near rated capacity, use a pulley block/snatch block to reduce the load on the wire rope.

⚠ **WARNING -**Never step over a cable, or go near a cable under load (in tension).

⚠ **WARNING -** Don't move the vehicle to pull a load (towing) on the winch cable. This could result in cable breakage.

⚠ **WARNING-**Disconnect the remote control and battery leads when not in use.

⚠ **WARNING-** Avoid "shock loads" by using the control switch intermittently to take up the slack in the wire rope. "Shock loads" can far exceed the rate capacity for the wire rope and drum.

WARNING-When re-spooling the cable ensure that the cable spools in the under-wind position with the cable entering the drum from the bottom, not the top. To spool correctly you should keep a slight load on the cable while pushing the remote button to draw in the cable. Walk toward the winch not allowing the cable to slide through your hands. Do not let your hands get within 12″ of the winch while re-spooling. Turn off the winch and repeat the procedure until a few feet of cable is left. Disconnect the remote control and finish spooling by hand by rotating the drum by hand with the clutch disengaged. Keep hands clear of the fairlead and drum while the winch is under power.

WARNING - Do not use as a hoist. Do not use for overhead lifting.

WARNING - Failure to heed these warnings may result in personal injury and/or property damage.

WARNING - Use gloves to protect hands when handling the cable. Never let the cable slide through your hands.

WARNING – Never connect the cable back to itself. Apply blocks to the wheels of the vehicle when on an incline. Duration of winching pulls should be kept as short as possible. If the motor becomes uncomfortably hot to the touch, stop winching immediately and let it cool down for a few minutes. Do not pull for more than one minute at or near the rated load.

CAUTION - If the motor stalls do not maintain power to the winch. Electric winches are designed and made for intermittent use and should not be used in constant duty applications.

CAUTION - Never disengage the clutch when there is a load on the winch.

CAUTION – Use the hand saver hook when handling the hook for spooling or un-spooling the wire rope.

GENERAL TIPS FOR SAFE OPERATION

- The 5250KGS and its all derivative types are rated at 5250KGS capacity when spooling the first rope layer on the drum. Overloading can damage the winch/motor/ or wire rope. For loads over 70% of rated line pull. we

recommend the use of the pulley block/snatch block to double the wire rope line. This will aid in two ways: a) reduce the number or rope layers on the drum, as well as, b) reduce the load on the wire rope by as much as 50%. When doubling the line back to the vehicle, attach to the frame or other load bearing part.

- The vehicle engine should be kept running during operation of the winch to minimize battery drain and maximize power and speed of the winch. If the winch is used for a considerable amount of time with the engine off the battery may be drained and too weak to restart the engine.
- Get to know your winch before you actually need to use it. We recommend that you set up a few test runs to familiarize yourself with rigging techniques, the sounds your winch makes under various loads, the way the cable spools on the drum, etc.
- Inspect the wire rope and equipment before each use. A frayed or damaged rope must be replaced immediately. Use only the manufacturer's identical replacement rope with the exact specifications.
- Inspect the winch installation and bolts to ensure that all bolts are tight before each operation.
- Never connect the cable back to itself. This will cause cable damage. Always use a snatch block, sling or chain of suitable strength as shown in the illustrations.
- Store the remote control inside your vehicle in a place that it will not be damaged.
- Any winch that appears to be damaged in any way, is found to be worn, or operates abnormally shall be removed from service.
- Pull only on parts of the vehicle as specified by the vehicle manufacturer.
- Only attachments and/or adapters supplied by the manufacturer shall be used.
- Whenever before your winch start to working, please slightly test-run your winch in two direction, even if the winch drum only round a few degree of angle, ensure the winch is well-balanced, especially after you operated the clutch, test-running winch can make winch in gear.

WINCHING TECHNIQUES A-Z

a. Take time to asses your situation and plan your pull.

b. Put on gloves to protect your hands.

c. Disengage the clutch to allow free-spooling and to save energy.

d. Attach the hand saver hook to the clevis hook.

e. Pull out the wire rope to your desired anchor point using the hand saver hook.

f. Secure the clevis hook to the anchor point: Sling, chain or snatch block. Do not attach the hook back onto the wire rope.

g. Engage the clutch.

h. Connect the remote control switch to the winch.

i. Start your engine to ensure power is being replenished to the battery.

j. Power in the wire rope guiding the wire under tension to draw up the slack in the wire. Once the wire is under tension stand well clear. Never step over the wire rope.

k. Double-check your anchors and make sure all connections are secure.

l. Inspect the wire rope. Make sure there are at least 5 wraps of wire rope around the winch drum.

m. Drape a blanket or jacket over the wire rope approximately 5 to 6 feet from the hook. Open the hood of the vehicle for added protection.

n. Clear the area. Make sure all spectators are back and that no one is directly in front or behind the vehicle or anchor point.

o. Begin winching. Be sure that the wire rope is winding evenly and tightly around the drum. The vehicle that is being winched can be slowly driven to add assistance to the winching process. Avoid shock loads; keep the wire rope under tension.

p. The vehicle to be winched should be placed in neutral and the emergency brake released. Only release the brake pedal when under full tension. Avoid shock loads to the winch. This can damage the winch, rope and vehicle.

q. The winch is meant for intermittent use. Under full load with a single line rig do not power in for more than a minute without letting the motor cool down for a few minutes and then resume the winching operation.

r. The winching operation is complete once the vehicle is on stable ground and is able to drive under its own power.

s. Secure the vehicle. Be sure to set the brakes and place the vehicle in park.

t. Release the tension on the wire rope. The winch is not meant to hold the vehicle for long periods of time.

u. Disconnect the wire rope from the anchor.

v. Rewind the wire rope. Make sure that any wire already on the drum has spooled tightly and neatly. If not, draw out the wire and re-spool from the point where the rope is tight.

w. Keep your hands clear of the winch drum and fairlead as the wire rope is being drawn in.

x. Secure the hook and hook strap.

y. Disconnect the remote control and store in a clean, dry place.

z. Clean and inspect connections and mounting hardware for next winching operation.

WINCH ASSEMBLY AND MOUNTING

1. Your winch is designed with a bolt pattern that is standard in this class of winch. Many winch mounting kits are available that utilize this bolt pattern for the popular vehicles and mounting channels. If you will utilize the mounting channel you must ensure that it is mounted on a flat surface so that the three major sections (motor, drum and gear housing) are properly aligned. Proper alignment of the winch will allow even distribution of the full rated load.
2. If your winch choices the mounting channel. Start by connecting the roller fairlead (Part# N1750900) to the mounting channel using 2 each of the cap screw M12 X 30 (Part# N1750022), lock washer (Part# N1750021) and securing (Make sure the screw is placed through the mounting channel and roller fairlead from inside the channel. This will allow enough clearance for the winch to be placed in the channel without obstruction.)
3. Assemble the winch to the mounting channel or vehicle bump base by first pulling and releasing the clutch knob to the “CLUTCH OUT” position (free spooling). Pull out a few inches of cable from the drum and feed the wire loop through the opening in the front of the mounting channel and roller fairlead. Now, using the remaining M12 x 35 cap screws (Part# N1750020) and lock washer (Part# N1750021) secure the winch to the mounting channel.
4. Connect the winch motor leads as detailed below:

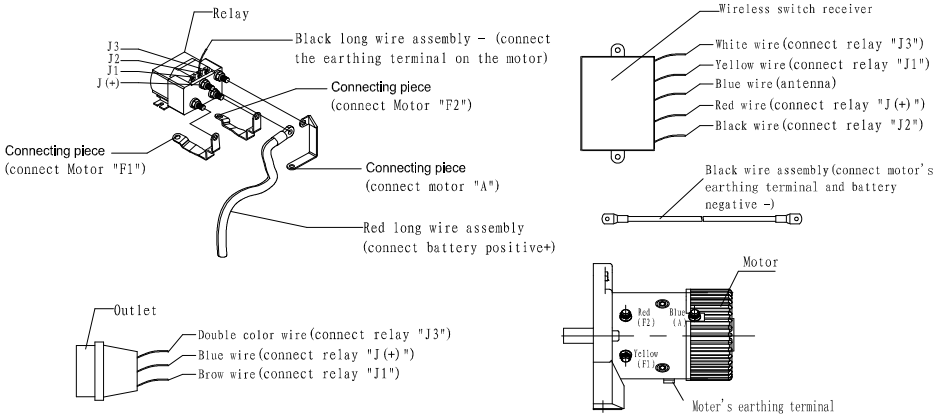

⚠ CAUTION – Batteries contain gases which are flammable and explosive. Wear eye protection during installation and remove all jewelry. Do not lean over battery while making connections.

5. Assemble the clevis hook to the cable. Take off the pin from the clevis hook, connect the clevis hook to the cable and mount the pin back to the clevis hook.
6. Always use the hand saver when free-spooling and re-spooling the wire rope. Using the hand saver keeps your hands and fingers away from the rotating drum.
7. Check for proper drum rotation. Pull and turn the clutch knob to the “CLUTCH OUT” position. Pull out some cable from the drum, and then turn the clutch knob to the “CLUTCH IN” position to engage the gears. Press the cable out button on the power switch. If the drum is turning and releasing more cable then your connections are accurate. If the drum is turning and collecting more cable then reverse the leads on the motor. Repeat and check rotation.

MOUNTING DRAWING

5250EN

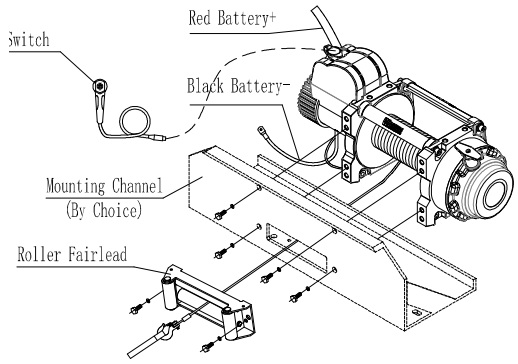

Caution: To bolt 'feet forward' on the IST 200.

WINCH ACCESSORIES YOU WILL NEED

NOT INCLUDED WITH YOUR WINCH

Gloves – For handling the wire rope and hook strap.

Anchor Strap/Chain – Tree saver anchor straps are made of high quality nylon with high tensile strengths up to 15000lbs.

Heavy Blanket – place on the cable to absorb energy should the wire rope break.

RIGGING TECHNIQUES

Self-Recovery

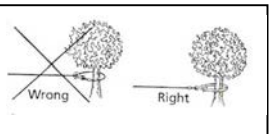

Fig 3.1

Locate a suitable anchor such as a strong tree trunk or boulder.

Always use a sling as an anchor point. **CAUTION** Do not attach the clevis hook back onto the cable as this could cause damage to the cable. As shown in Fig 3.1

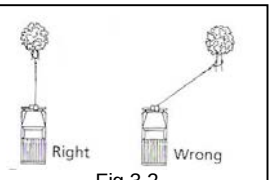

Fig 3.2

CAUTION Do not winch from an acute angle as the wire rope will pile up on one side of the drum causing damage to wire rope and the winch. Fig 3.2

Short pulls from an angle can be used to straighten the vehicle. Long pulls should be done with the wire rope at a 90° angle to the winch/vehicle.

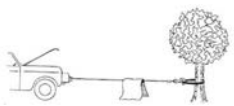

Fig 3.3

When pulling a heavy load, place a blanket or jacket over the wire rope five or six feet from the hook. In the event of a broken cable it will dampen the snap back. For additional protection open the hood of the vehicle as shown in Fig 3.3

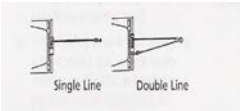

Fig 3.4

For pulls over 70% rated line pull, we recommend the use of the snatch block/pulley block to double line the wire rope. Fig 3.4

This reduces the load on the winch and the strain on the rope by up to 50% depending on the included angle

Fig 3.5

⚠**WARNING -** Never use your winch for overhead hoisting or for lifting people or moving people.

WINCH WORKING DEMONSTRATION

1. Disengage the clutch by turning the clutch to the “CLUTCH OUT” position.
2. Grab the cable assembly (Part# X1751100) and pull the cable to the desired length, then attach to item being pulled.

⚠**Caution:** Always leave at least five turns of cable on the drum; Review winch safety warnings and precautions on page 2、3 before continuing.

3. Reengage the clutch by turn the clutch assembly (Part# X1750700) to the “CLUTCH IN” position, if the clutch is not engaged, the winch drum must be turned by hand, until the clutch is totally engaged.
4. Insert the switch assembly (Part# X1751000) connector onto the control box.
5. Test-run winch in two directions, each direction for one or two seconds.
6. While standing aside of the tow path, hold and operate the switch assembly supplied by your choice. To reverse directions, wait until the motor stops before reversing directions.
7. When the pulling is complete, remove the switch assembly (Part# X1751000). From the female connector of the directional valve and replace the female connectors cover.

REPLACING THE WIRE ROPE

If the wire rope has become worn or is beginning to show signs of strands breaking, it must be replaced before being used again.

1. Turning clutch to the “CLUTCH OUT” position.
2. Extend cable assembly to its full length. Note how the existing cable is connected to the drum.
3. Remove old cable assembly and attach new one as the old cable connected to the drum. Insert the end of the new rope and secure the screw M8x10(Part#X1750008).
4. Ensure that the new cable wraps in the same rotation direction as the old one. The cable should leave the drum from the bottom, under the drum.
5. Turning clutch to the “CLUTCH IN” position.
6. Retract Cable Assembly onto drum, first five wraps being careful not to allow kinking, then winch cable must be wound onto the drum under a load of at least 10% rated line pull.

WARNING - Only replace the wire rope with the identical replacement part recommended by the manufacturer.

MAINTENANCE

1. Periodically check the tightness of mounting bolts and electrical connections. Remove all dirt or corrosion and always keep clean.
2. Do not attempt to disassemble the gear box.
3. The gearbox has been lubricated using a high temperature lithium grease and is sealed at the factory. No internal lubrication is required.

TROUBLE SHOOTING

SYMPTOM	POSSIBLE CAUSE	SUGGESTED ACTION
Motor does not turn on	-Switch Assembly not connected properly -Loose battery cable connections -Defective switch assembly -Defective motor -Water has entered	-Insert switch assembly all the way into the connector. -Tighten nuts on all cable connections. -Replace switch assembly. -Check for voltage at armature port with Switch pressed. If voltage is present, replace motor. -Allow to drain and dry. Run in short bursts

	motor	without load until completely dry.
Motor runs but cable drum does not turn	-Clutch not engaged	-Turn clutch to the “In” position. If problem persists, a qualified technician needs to check and repair.
Motor runs slowly or without normal power	-Insufficient current or voltage	-Battery weak recharge. Run winch with vehicle motor running. -Loose or corroded battery cable connections. Clean, tighten, or replace.
Motor overheating	-Winch running time too long	-Allow winch to cool down periodically.
Motor runs in one direction only	-Defective switch assembly.	-Loose or corroded battery cable or motor cable connections. Clean and tighten. -Repair or replace switch assembly.
Winch braking malfunction.	-Winch working in wrong direction. -Brake slice worn or worn not.	-Change winch working direction looking is to clockwise look at the motor end - Simply readjusted the braking angle or replaces the new brake slice.

WARNING - Adjustment braking angle method: The spring according to the spring gyrotropic pre-tight two weeks, then shows the spline tooth set according to following braking cutaway view the adjustment angle for 20°±5°.

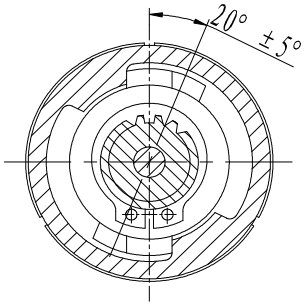

WINCH ASSEMBLY DRAWING
5250EN

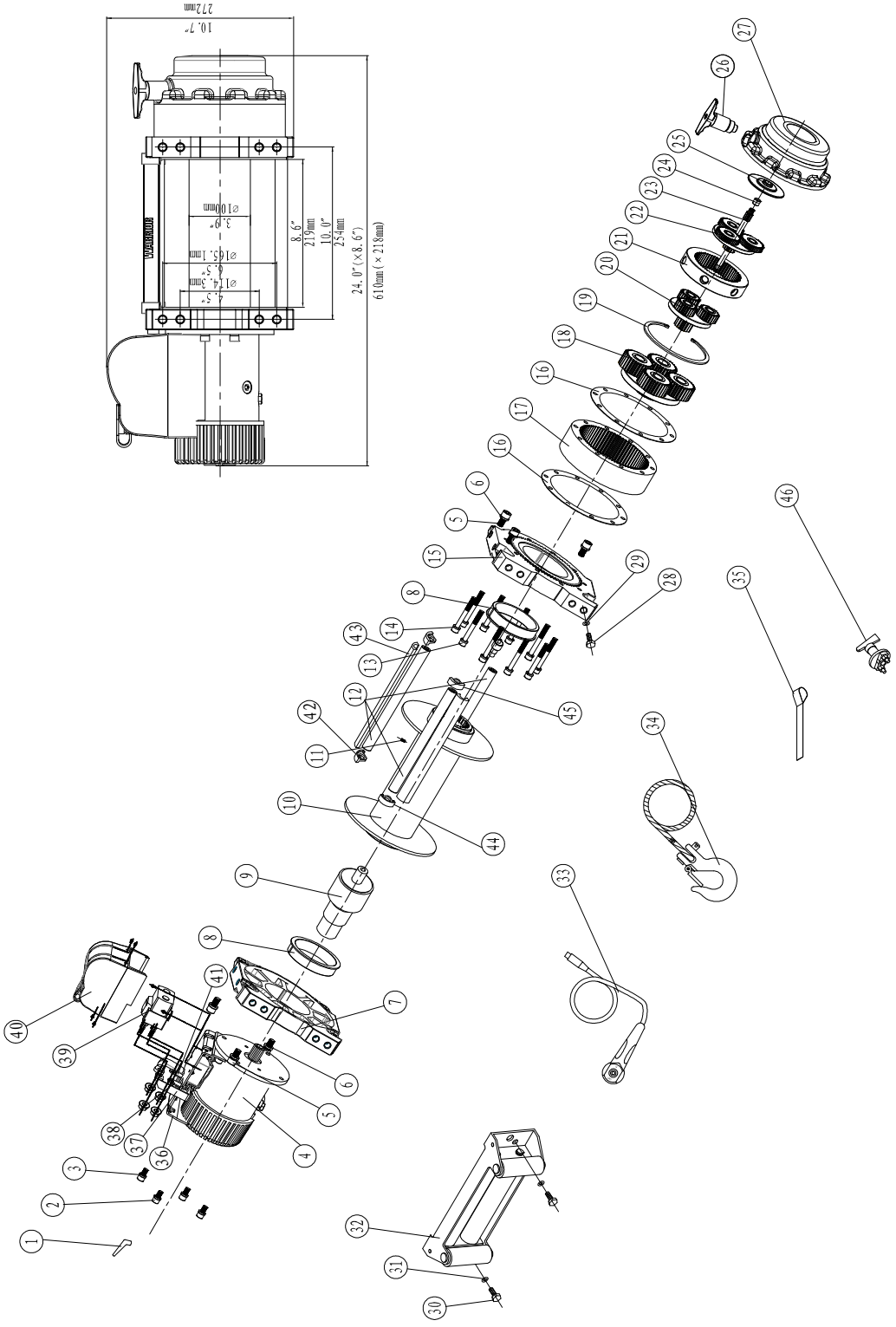

WINCH PARTS LIST
5250EN

No.	Part #	Qty	Description	Remark
1	N1750001	3	Terminal Protector	
2	N1750002	4	Screw M8 x 20	
3	N1750003	4	Lock Washer Φ8	
4	N1750100	1	Motor Assembly	
5	N1750004	6	Screw M10 x 35	
6	N1750005	6	Lock Washer Φ10	
7	N1750006	1	Motor Bracket	
8	N1750007	2	Bushing-Drum	
9	N1750200	1	Break/shift Assembly	
10	N1750300-1	1	Drum Assembly	
11	N1750008	1	Screw M8×10	
12	N1750009	3	Tie Bar	
13	N1750010	10	Screw M8 x 70	
14	N1750011	10	Lock Washer Φ8	
15	N1750003	1	End Bearing	
16	N1750012	2	Gasket	
17	N1750013	1	Gear—Ring（Output）	
18	N1750400	1	Gear Carrier Assembly（Output）	
19	N1750014	1	Circlip For Hole	
20	N1750500	1	Gear Carrier Assembly（Intermediate）	
21	N1750015	1	Gear—Ring（Intermediate）	
22	N1750600	1	Gear Carrier Assembly（Input）	
23	N1750016	1	Gear—Input Sun	
24	N1750017	1	Shaft Sleeve	
25	N1750018	1	Trust Washer	
26	N1750700	1	Clutch Assembly	
27	N1750019	1	Gear—Housing	
28	N1750020	8	Screw M12×30	
29	N1750021	8	Lock Washer Ø12	
30	N1750022	2	Screw M10×35	
31	N1750021	2	Lock Washer Ø10	
32	N1750900	1	Roller Fairlead	
33	N1751000	1	Remote Control Switch（RC3）	
34	N1751100-2	1	Cable Assembly	
35	N1750023	1	Strap	
36	N1750024	1	Mounting Play	
37	N1750025	1	Connecting Piece	
38	N1750026	1	Connecting Piece	
39	N1751200	1	Relay With Screw Assembly	
40	N1751300	1	Cover With Screw Assembly	
41	N1750027	1	Connecting Piece	
42	N1750028	2	Connecting Block	
43	N1750029	2	Connecting Rod Sets	
44	N1750030	1	Connecting Block Ⅰ	
45	N1750031	1	Connecting BlockⅡ	
46	N1751400	1	Battery Switch	

SPECIFICATION

Rated line pull	5250KGS
Motor: series wound	12V:Input: 4.9kW / 7.0hp;Output: 2.9 kW /3.9hp 24V:Input: 6.0kW / 7.9hp;Output: 3.1 kW /4.1hp
Gear reduction ratio	430:1
Cable (Dia.× L)	Ø11mm×21m
Drum size (Dia.× L)	Ø100mm×219mm
Mounting bolt pattern	10 "×4.5 " (254mm×114.3mm) /10 "×6.5 " (254mm×165.1mm) 8-M12
Overall dimensions (L×W×H)	610mm ×218mm ×272mm
Net weight lbs(kg)	65KG

Pull, Speed, Amperes, Volts (First layer):

Line Pull	Line Speed ft/min (m/min)		Current A	
lbs (kgs)	12V DC	24V DC	12V DC	24V DC
0	14.4（4.4）	13.1（4.0）	80	70
2205（1000）	8.5（2.6）	9.1（2.8）	130	78
4409（2000）	6.9（2.1）	7.2（2.2）	180	108
11574（5250）	4.9（1.5）	5.2（1.6）	350	180

Line pull and rope capacity in layer

Layer	Rated line pull lbs (kgs)	Total rope on the drum ft (m)
1	11574（5250）	21.3（6.5）
2	9352（4242）	45.9（14.0）
3	7848（3560）	65.9（21.0）